Product Brochure

Anritsu Advancing beyond

Wireless Connectivity Test Set

MT8862A

Excellent Eco Product

Have you measured me up?

MT8862A

Ideal for RF TRx Tests of WLAN Devices

Wireless communications over WLAN are increasing rapidly due to the widespread use of mobile terminals, such as smartphones, as well as integration of network-connected TVs, cleaners, automobiles, industrial equipment, sensors, and more, into the Internet of things (IoT). Makers of these equipment are anticipating more end-user enquiries related to WLAN performance, including network coverage, reception sensitivity, etc.

Anritsu's Wireless Connectivity Test Set is ideal for measuring the RF TRx characteristics at design and manufacturing inspection of WLAN devices. It has a built-in Network Mode for measuring the performance of the WLAN DUT under realistic operation conditions to play a key role in quality evaluation and improvement.

11be

6 GHz Band

Supports Latest Technologies

MT8862A supports IEEE802.11a/b/g/n/ac/ax and the latest WLAN standard, IEEE802.11be, as well as 160/320 MHz channel bandwidth in the 6 GHz band, which is becoming an unlicensed band worldwide. RF TRx characteristics such as transmit power, modulation accuracy, and receive sensitivity can be evaluated for a variety of diversified WLAN-equipped devices.

Network Mode

Direct Mode

Measurement under Realistic Operation Conditions

The MT8862A uses standard WLAN protocol messaging with a built-in Network Mode to establish a connection with the WLAN device and measure the RF TRx characteristics under realistic operation conditions. Also the MT8862A supports Direct Mode.

- Smartphone Tablet
- Smart appliances
- Wearable device
- Gateway
- Automotive
- Smart grid
- AR/VR
- Medical device

Wireless Connectivity Test Set MT8862A

RF TRx Measurements of WLAN Equipment

The Wireless Connectivity Test Set MT8862A is designed for measuring the RF TRx characteristics of WLAN equipment. It has standard WLAN protocol messaging (WLAN signalling) to connect with the device under test (DUT) for measuring the TRx performance items as Network Mode. It is the biggest feature of MT8862A. MT8862A gives manifold inspections for WLAN equipment because it also supports Direct Mode.

Wireless Connectivity Test Set
MT8862A

Supported Communications Standards • Security encryption

WLAN IEEE802.11a/b/g/n/ac/ax/be (2.4 GHz, 5 GHz and 6 GHz bands) [AP/STA]
WEP, WPA-Personal, WPA2-Personal and WPA3-Personal

RF Performance Measurement under Actual Operation Conditions (Network Mode)

By using the MT8862A Network Mode, RF TRx characteristics, such as Tx power, modulation accuracy (EVM), etc., can be measured with the WLAN device in actual operation conditions. It is not necessary to put the DUT into dedicated test mode and directly control the DUT.
The DUT RF performance can be quantified under the firmware conditions at actual shipment.

Easy Measurement Environment Configuration

The MT8862A can simulate access points (AP) and station (STA) to establish the DUT network connection using IEEE802.11a/b/g/n/ac/ax/be WLAN protocol messaging. Each WEP, WPA-Personal, WPA2-Personal and WPA3-Personal secure connection method is supported, and TKIP and AES encryption schemes can be selected by combination with each standard. When the connection is established, RF measurements can be made using general WLAN communications procedures without requiring special tools and control procedures, eliminating the need for configuring a special measurement environment.

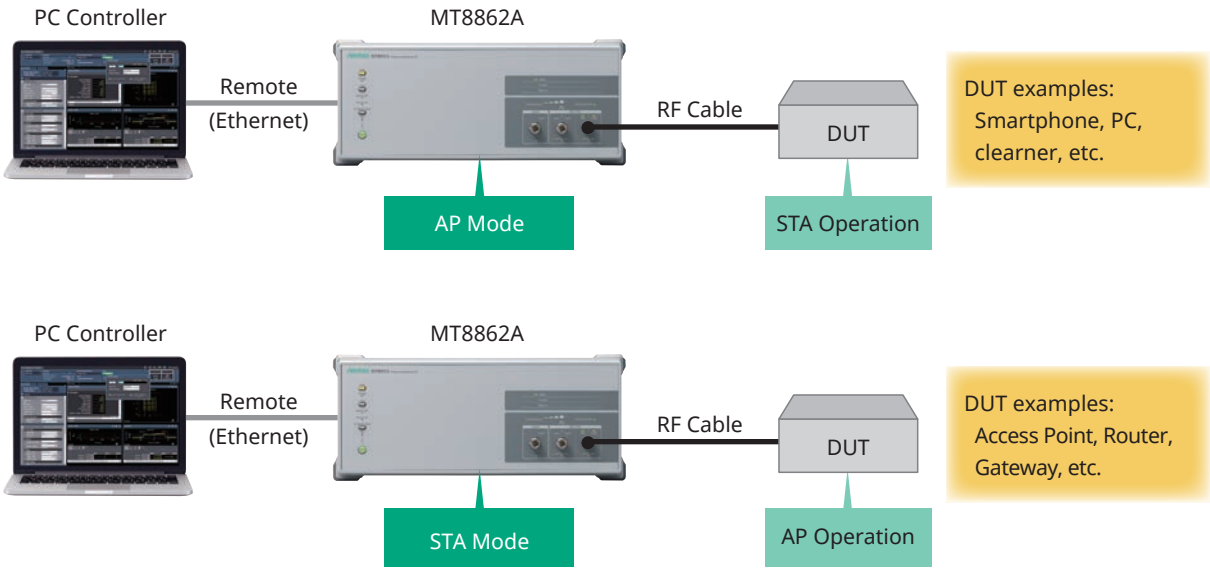

ICMP Echo Request for Tx Measurement

With the ICMP echo request, the MT8862A can measure RF Tx characteristics of reply packets from the DUT. The measurement targets are both data frames and ACK frames.

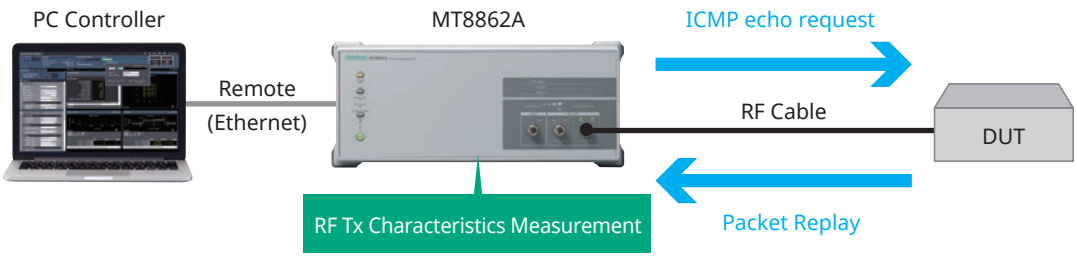

Rx Sensitivity Measurements using ACK Frame Count for Bathtub Curve Generation

The MT8862A supports Rx sensitivity measurements using the ACK frame count; counting the ACK frames sent by the DUT versus the test packets sent from the MT8862A supports calculation of the packet error rate (PER). Packets can be sent while lowering the power level by setting the power level range (0 to –120 dBm) and step size, and the Rx sensitivity Bathtub curve can be generated automatically. Packets including MAC address and payload length can be configured in real-time for measurement at various data rates.

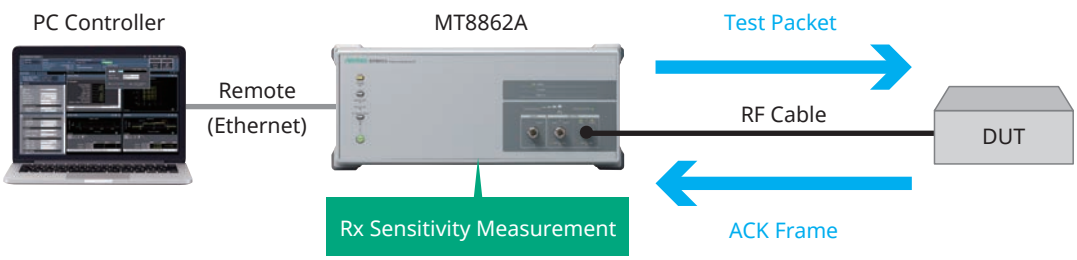

Web Browser GUI Operation Immediately after Connection

Connect the MT8862A to the external PC using an Ethernet cable for instant access from the Web browser to complete setup of the GUI operation environment without requiring test setup operation.
The Web-browser based GUI eliminates usage worries about version matching with the main frame firmware. Additionally, the MT8862A remote control port supports the DHCP client function and both host and domain name settings offer easy control simply by connecting the PC controller and MT8862A to the same network.

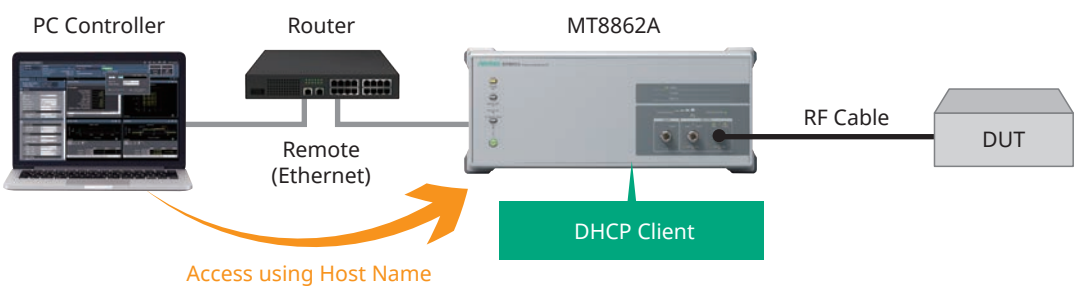

WLAN Measurement Software MX886200A Features

Function Test

Frame Capture Logging for Troubleshooting Connection Problems

With built-in frame capture logging function, the MT8862A can capture and save frame logs for troubleshooting DUT connection problems. Captured logs are in the *.pcap format for viewing by supported applications, making it easier to analyze DUT connection problems.

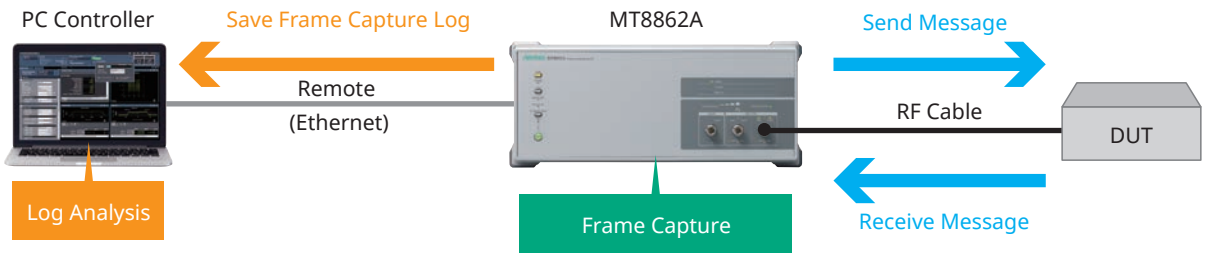

IP Data Transfer using Connection Verification Test

The Ethernet port on the back panel of the MT8862A can be used for exchanging IP data with an external server; IP connections between the client PC connected to the DUT and the external server connected to the MT8862A can be checked using the ping function, etc.

* This function does not support MIMO, does not support 802.11ax/be.

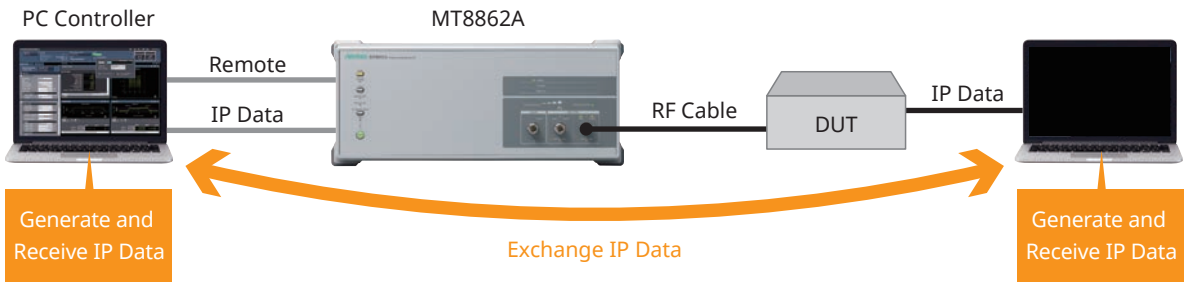

Receiver Sensitivity and Transmit Power Measurement Function for 2×2 MIMO

Receiver sensitivity and transmit power measurement under 2×2 MIMO communication can be tested by using 2 sets of MT8862A. This is suitable for RF performance evaluation for completed products.

* This function supports IEEE802.11n/ac/ax/be.

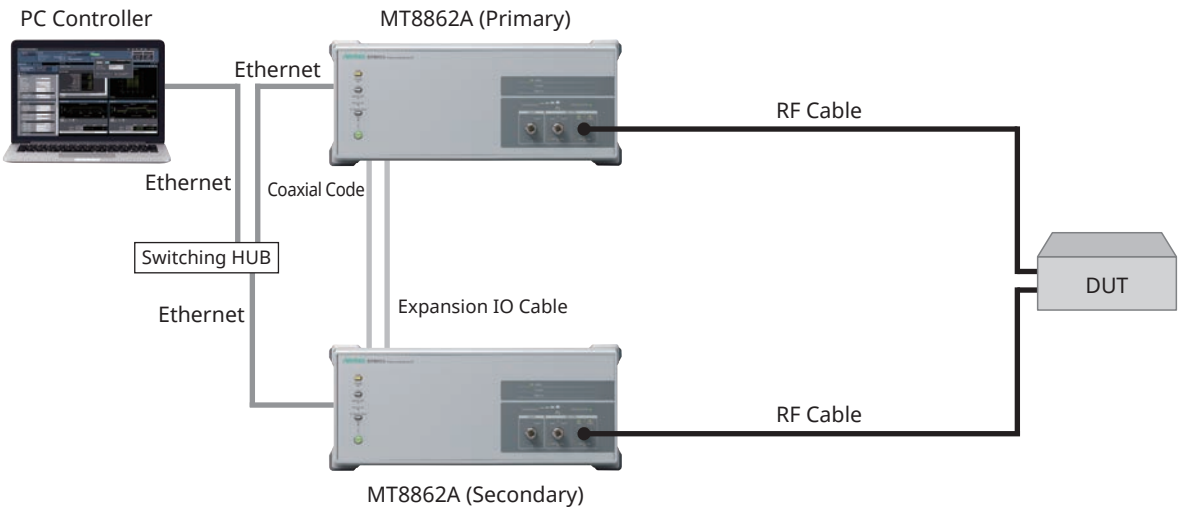

WLAN Measurement Software MX886200A Features

Application Test

Network Mode for Over The Air (OTA) Test

The TRx performance of wireless terminals is affected by factors such as the terminal form and antenna characteristics. The OTA test measures the general TRx performance of the wireless terminal using actual radio waves. The WLAN OTA test measures RF performance specifications in accordance with the recommendations of CTIA* and the Converged Wireless Group (CWG) of the Wi-Fi Alliance, including Total Radiated Power (TRP), Total Isotropic Sensitivity (TIS), System integrators have test solution using MT8862A.

*: Cellular Telecommunications & Internet Association; international non-profit organization composed of wireless-communications-related businesses, manufacturers, service providers, etc.

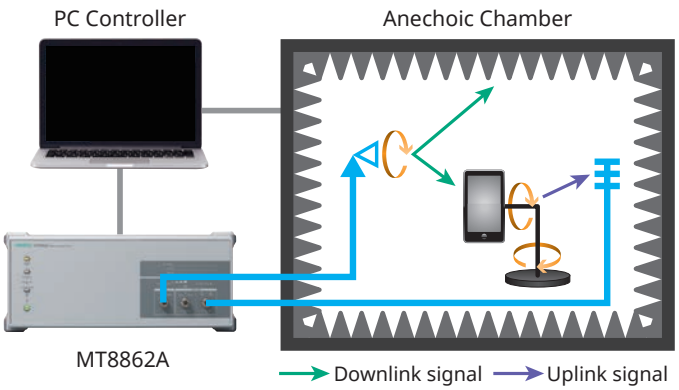

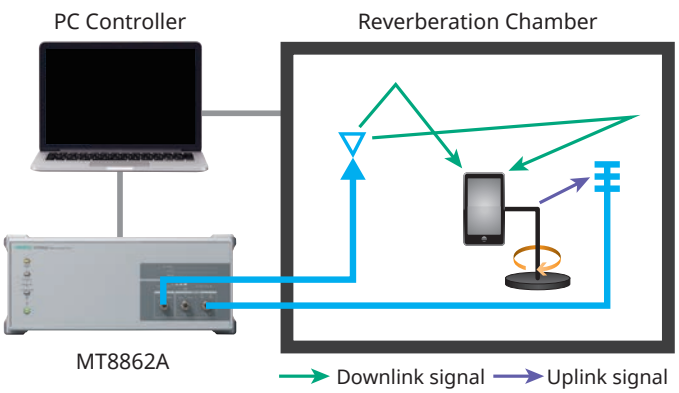

Auto-ID information display

MT8862A displays header information of packets used for transmit measurement as Auto-ID Information.

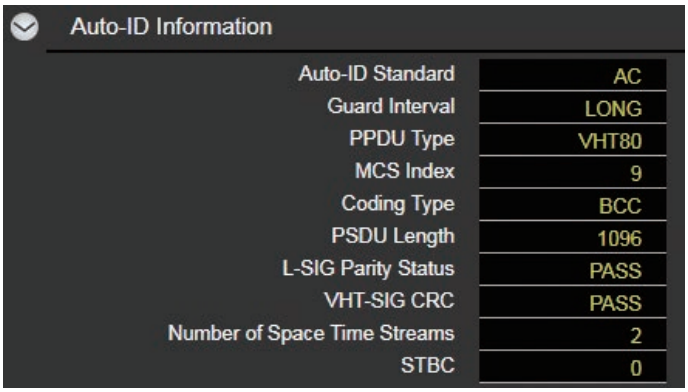

Auto-ID Information

Auto-ID Standard	AC
Guard Interval	LONG
PPDU Type	VHT80
MCS Index	9
Coding Type	BCC
PSDU Length	1096
L-SIG Parity Status	PASS
VHT-SIG CRC	PASS
Number of Space Time Streams	2
STBC	0

WLAN Measurement Software MX886200A Key Functions

RF Tx Test

Tx Power Measurement and Power Profile Display

The MT8862A measures the Tx power and displays the average and peak power. The crest factor indicating the difference between the average power and peak power and the power-on ramp time and power-off ramp time indicating the time of ringing and falling are also displayed.
The power profile is displayed as a graph of the power vs time for the signal.

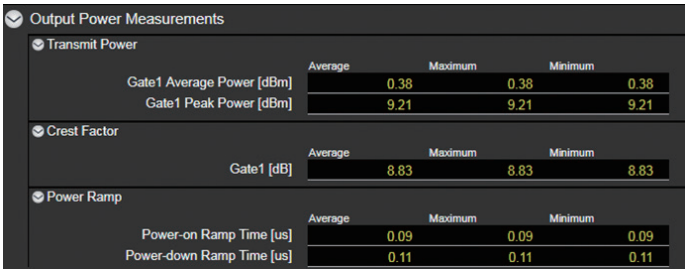

Frequency and Modulation Analysis/IQ Constellation Display/Spectrum Display

The MT8862A performs frequency and modulation analyses to measure the Error Vector Magnitude (EVM), which is a good of overall indicator of transmitter quality. When the numerical EVM is bad, the Packet Error Rate (PER) is usually high at WLAN connection. The RMS EVM and Peak EVM for DSSS- and OFDM-modulated carrier waves are expressed as % and dB values, respectively.
In case of OFDM modulation, in addition to EVM, Center Frequency Leakage, Center Frequency Tolerance, Symbol Clock Frequency Tolerance, IQ Imbalance, and Spectral Flatness are also displayed. In case of DSSS modulation, in addition to EVM, Center Frequency Tolerance, IQ Offset, Phase & Magnitude Error, IQ Imbalance, Chip Clock Frequency Tolerance, and Carrier Suppression from IQ Offset are also displayed.
Furthermore, the IQ constellation, spectrum flatness, and spectrum analysis results are displayed as graphs.

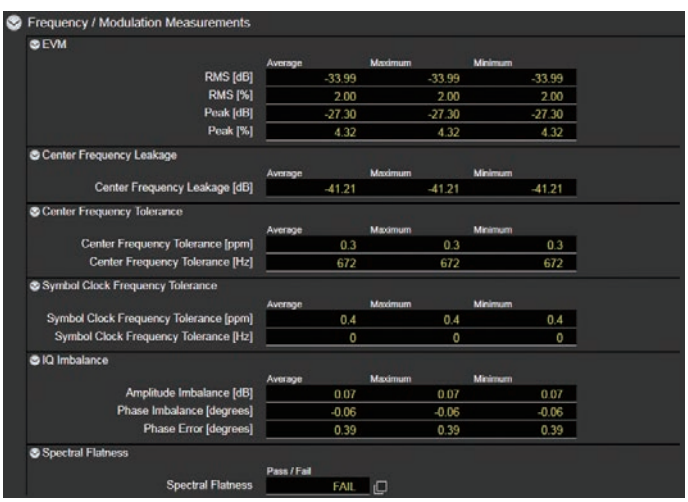

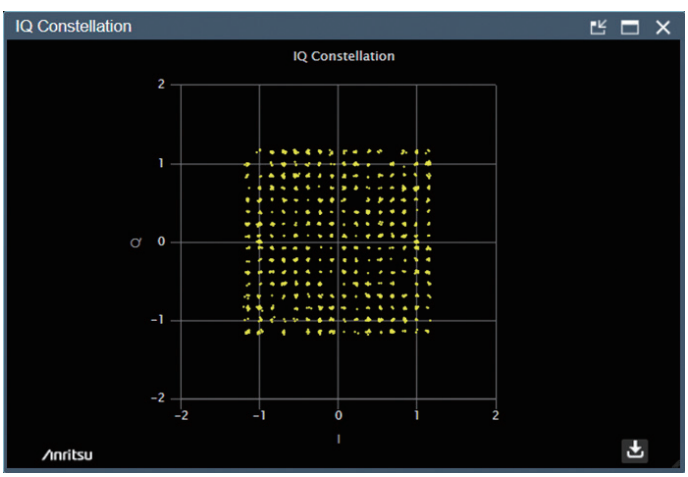

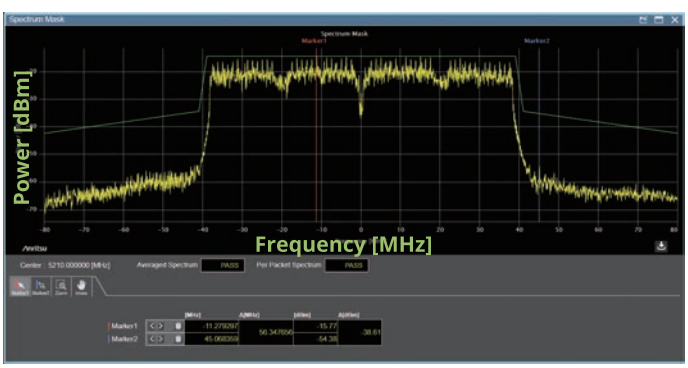

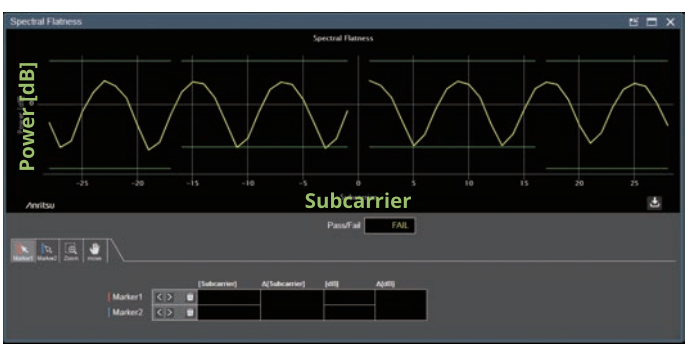

RF Rx Test

Packet Error Rate (PER)

The MT8862A Network Mode is a unique function that can use general communication method and instead automatically implements the 802.11a/b/g/n/ac/ax/be device sensitivity search measurement to output the Bathtub curve. By using this function, the device performance can be analyzed at high speed for each data rate, offering a convenient measurement solution for verifying compliance with the 802.11b minimum receiver sensitivity test specifications. This is a flexible test solution because the number of packets sent at each power level can be specified both as the start and stop search level and as step size.

Frame Rx rate (FRR)

The Frame Rx Rate can be displayed instead of displaying the Packet Rx Error Rate (PER).

WLAN Measurement Software MX886200A Key Functions

Connectivity

	802.11a
Frequency Range	5180 MHz to 5885 MHz*1
Operation Mode	—
Modulation	OFDM (BPSK, QPSK, 16QAM, 64QAM)
Data Rate	6, 9, 12, 18, 24, 36, 48, 54 Mbps
Security*2	WEP, WPA-Personal, WPA2-Personal, WPA3-Personal

	802.11b	802.11g
Frequency Range	2412 MHz to 2484 MHz	
Operation Mode	—	ERP-OFDM
Modulation	DSSS, CCK	OFDM (BPSK, QPSK, 16QAM, 64QAM)
Data Rate	1, 2, 5.5, 11 Mbps	6, 9, 12, 18, 24, 36, 48, 54 Mbps
Security*2	WEP, WPA-Personal, WPA2-Personal, WPA3-Personal	

	802.11n	802.11ac*5
Frequency Range	2412 MHz to 2484 MHz and 5180 MHz to 5885 MHz*1	5180 MHz to 5885 MHz*1
Bandwidth	20 MHz, 40 MHz	20, 40, 80, 160 MHz*6
MCS	MCS0 to MCS7, MCS0 to MCS15*3	MCS0 to MCS9*6
FEC	BCC	BCC
PPDU Format	HT-mixed, HT-greenfield*4	VHT
Guard Interval Type	Long, Short	Long, Short
RF Chain	Single (SISO), 2×2MIMO*3	Single (SISO), 2×2MIMO*3
Security*2	WPA-Personal, WPA2-Personal, WPA3-Personal	

	802.11ax*7
Frequency Range	2412 MHz to 2472 MHz, 5180 MHz to 5885 MHz, 5955 MHz to 7115 MHz*1
Bandwidth	20, 40 MHz (2.4 GHz Band) 20, 40, 80, 160 MHz (5 GHz Band)*8 20, 40, 80, 160 MHz (6 GHz Band)*8
MCS	MCS0 to MCS11
FEC	BCC, LDPC
PPDU Format	Tx measurement: HE SU, HE TB*9 Rx measurement: HE SU
Guard interval and HE-LTF type	HE SU 0.8 µs GI, 1xHE-LTF 0.8 µs GI, 2xHE-LTF 1.6 µs GI, 2xHE-LTF 0.8 µs GI, 4xHE-LTF 3.2 µs GI, 4xHE-LTF HE TB 1.6 µs GI, 2xHE-LTF 3.2 µs GI, 4xHE-LTF
RF Chain	Single (SISO), 2×2MIMO*10
Security*2	WPA-Personal, WPA2-Personal, WPA3-Personal

	802.11be*11
Frequency Range	2412 MHz to 2472 MHz, 5180 MHz to 5885 MHz, 5955 MHz to 7115 MHz*1
Bandwidth	20, 40 MHz (2.4 GHz Band) 20, 40, 80, 160 MHz (5 GHz Band)*8 20, 40, 80, 160, 320 MHz (6 GHz Band)*8, *12
MSC	MCS0 to MCS13
FEC	BCC, LDPC
PPDU format	Tx measurement: EHT MU, EHT TB*13 Rx measurement: EHT MU
Guard interval and EHT-LTF type	EHT MU 1.6 µs GI, 1xEHT-LTF 0.8 µs GI, 2xEHT-LTF 1.6 µs GI, 2xEHT-LTF 0.8 µs GI, 4xEHT-LTF 3.2 µs GI, 4xEHT-LTF
RF chain	Single (SISO), 2×2MIMO*14
Security*2	WPA-Personal, WPA2-Personal, WPA3-Personal

*1: The frequencies above 5825 MHz require MT8862A-002 and MT8862A-010.
*2: Secure connections require the MX886200A-020
*3: Available when measure 2×2MIMO receiver sensitivity using MX886200A-010.
*4: Only receiver sensitivity testing is supported in 2×2MIMO.
*5: 802.11ac connection requires MX886200A-001
*6: MCS9 is only available on 40 MHz or 80 MHz bandwidth.
*7: 802.11ax connection requires MX886200A-002
*8: 160 MHz bandwidth require MX886200A-030.
*9: Only HE SU is supported in 2×2MIMO.
*10: Available when measure 2×2MIMO receiver sensitivity using MX886200A-011.
*11: 802.11be connection requires MX886200A-003.
*12: 320 MHz bandwidth require MX886200A-030 and MX886200A-031.
*13: Only EHT MU is supported in 2×2MIMO.
*14: Available when measure 2×2MIMO receiver sensitivity using MX886200A-012.

WLAN Measurement Software MX886200A Measurement Items

Tx Measurements

Items by Standards

IEEE802.11-2020: 802.11b Tx Measurements

802.11b	Measurement Items
16.3.7.2	Transmit power levels
16.3.7.4	Transmit spectral mask
16.3.7.5	Transmit center frequency tolerance
16.3.7.6	Chip clock frequency tolerance
16.3.7.7	Transmit power-on and power-down ramp
16.3.7.9	Transmit modulation accuracy

IEEE802.11-2020: 802.11a/g/n/ac Tx Measurements*1

802.11a	802.11g	802.11n	802.11ac	Measurement Items
17.3.9.2	18.4.7.2	19.3.18.3	N/A	Transmit power levels
17.3.9.3	18.4.7.3	19.3.18.1	21.3.17.1	Transmit spectrum mask*2
17.3.9.5	18.4.7.4	19.3.18.4	21.3.17.3	Transmit center frequency tolerance
17.3.9.6	18.4.7.5	19.3.18.6	21.3.17.3	Symbol clock frequency tolerance
17.3.9.7.2	17.3.9.7.2	19.3.18.7.2	21.3.17.4.2	Transmitter center frequency leakage
17.3.9.7.3	17.3.9.7.3	19.3.18.2	21.3.17.2	Transmitter spectral flatness
17.3.9.7.4	17.3.9.7.4	19.3.18.7.3	21.3.17.4.3	Transmitter constellation error
17.3.9.8	17.3.9.8	19.3.18.7.4	21.3.17.4.4	Transmitter modulation accuracy test

IEEE802.11ax-2021/IEEEE802.11be draft3.0: 802.11ax/be Tx Measurements*3

802.11ax	802.11be	Measurement Items
27.3.15.3	36.3.16.3	Pre-correction accuracy requirements*4
27.3.19.1	36.3.20.1	Transmit spectral mask*5
27.3.19.2	36.3.20.2	Spectral flatness
27.3.19.3	36.3.20.3	Transmit center frequency and symbol clock frequency tolerance
27.3.19.4.2	36.3.20.4.2	Transmit center frequency leakage
27.3.19.4.3	36.3.20.4.3	Transmitter constellation error
27.3.19.4.4	36.3.20.4.4	Transmitter modulation accuracy (EVM) test

*1: 802.11ac Tx measurement requires MX886200A-001.
*2: Frequency SPAN of 802.11ac Network Mode supports up to ±80 MHz.
*3: 802.11ax Tx measurement requires MX886200A-002. 802.11be Tx measurement requires MX886200A-003.
*4: Measure the error between DUT transmission power and Target RSSI.
*5: Frequency SPAN of 802.11ax Network Mode supports up to ±80 MHz.

Measurement Items

MT8862A 11b Measurement Items
Transmit power
Crest factor
Power ramp
EVM (Transmit modulation accuracy)
Center frequency tolerance
IQ offset
Phase error
Magnitude error
Amplitude imbalance
Phase imbalance
Chip clock frequency tolerance
Carrier suppression from IQ offset
Spectrum mask

MT8862A 11a/g/n/ac Measurement Items
Transmit power
Crest factor
Power ramp
EVM (Transmit modulation accuracy)
Center frequency leakage
Center frequency tolerance
Symbol clock frequency tolerance
Amplitude imbalance
Phase imbalance
Phase error
Spectrum flatness
Spectrum mask

MT8862A 11ax HE SU (Single User) Measurement Items
Transmit power
Crest factor
Power ramp
EVM (Transmit modulation accuracy)
Center frequency leakage
Center frequency tolerance
Symbol clock frequency tolerance
Amplitude imbalance
Phase imbalance
Phase error
Spectrum flatness
Spectrum mask

MT8862A 11ax HE TB (Multi User) Measurement Items
Transmit power
Power pre-correction accuracy
Crest factor
Power ramp
EVM (Transmit modulation accuracy)
Unused tone error
Center frequency leakage
Center frequency tolerance
Center frequency offset
Amplitude imbalance
Phase imbalance
Phase error
Spectrum flatness
Spectrum mask

MT8862A 11be EHT MU (Single User) Measurement Items
Transmit power
Crest factor
Power ramp
EVM (Transmit modulation accuracy)
Center frequency leakage
Center frequency tolerance
Symbol clock frequency tolerance
Spectrum flatness
Spectrum mask

MT8862A 11be EHT TB (Multi User) Measurement Items
Transmit power
Power pre-correction accuracy
Crest factor
Power ramp
EVM (Transmit modulation accuracy)
Unused tone error
Center frequency leakage
Center frequency tolerance
Center frequency offset
Spectrum flatness
Spectrum mask

WLAN Measurement Software MX886200A Measurement Items

Tx Measurements

Graph Display Items

MT8862A 11b Graph Display Items
IQ Constellation
Power Profile
Spectrum Mask

MT8862A 11a/g/n/ac Graph Display Items
IQ Constellation
Power Profile
Spectrum Mask
Spectrum Flatness

MT8862A 11ax/be Graph Display Items
IQ Constellation
Power Profile
Spectrum Mask
Spectrum Flatness
Carrier Frequency Offset Error (CCDF)*
Unused Tone Error

*: Available on HETB format.

Rx Measurements

IEEE802.11-2020: 802.11b Rx Measurements

802.11b	Measurement Item
16.3.8.2	Receiver minimum input level sensitivity
16.3.8.3	Receiver maximum input level
16.3.8.4	Receiver adjacent channel rejection*1

IEEE802.11-2020: 802.11a/g/n/ac Rx Measurements*2

802.11a	802.11g	802.11n	802.11ac	Measurement Item
17.3.10.2	18.4.8.2	19.3.19.1	21.3.18.1	Receiver minimum input level sensitivity
17.3.10.3	18.4.8.3	19.3.19.2	21.3.18.2	Adjacent channel rejection*1
17.3.10.4	17.3.10.4	19.3.19.3	21.3.18.3	Nonadjacent channel rejection*1
17.3.10.5	18.4.8.4	19.3.19.4	21.3.18.4	Receiver maximum input level

IEEE802.11ax-2021: 802.11ax Rx Measurements*3

802.11ax	Measurement Item
27.3.20.2	Receiver minimum input sensitivity
27.3.20.3	Adjacent channel rejection*1
27.3.20.4	Nonadjacent channel rejection*1
27.3.20.5	Receiver maximum input level

IEEE802.11be draft3.0: 802.11be Rx Measurements*4

802.11be	Measurement Item
36.3.21.2	Receiver minimum input sensitivity
36.3.21.3	Adjacent channel rejection*1
36.3.21.4	Nonadjacent channel rejection*1
36.3.21.5	Receiver maximum input level

Graph Display

Measurement Item
Packet Error Rate (PER)
Frame Reception Rate (FRR)

*1: Sold separately; requires signal generator
*2: 802.11ac Rx measurement requires MX886200A-001
*3: 802.11ax Rx measurement requires MX886200A-002
*4: 802.11be Rx measurement requires MX886200A-003

Wireless Connectivity Test Set MT8862A Configuration

System Configurations/Options/Software/PC Controller Operation Environment

System	Wireless LAN
Main Frame	Wireless Connectivity Test Set MT8862A
Basic Configuration (Hardware)	RF Frequency 2.4 GHz, 5 GHz MT8862A-001
Basic Configuration (Software)	WLAN Measurement Software MX886200A
Option (Hardware)	RF Frequency 6 GHz MT8862A-002 Extended RF Hardware MT8862A-010 Extended Bandwidth Hardware MT8862A-011
Options (Software)	WLAN 802.11ac Option MX886200A-001 WLAN 802.11ax Option MX886200A-002 WLAN 802.11be Option MX886200A-003 2×2MIMO Measurement Software MX886200A-010 2×2MIMO Measurement Software 802.11ax MX886200A-011 2×2MIMO Measurement Software 802.11be MX886200A-012 WLAN Security Function MX886200A-020 160 MHz Bandwidth MX886200A-030 320 MHz Bandwidth MX886200A-031

Verified PC Operation Environment

PC	Software OS: Windows 10 Browser: Chrome CPU: Intel Core i5 processor Clock: 2.5 GHz Memory: 1 GB minimum Hard Disk: 500 MB minimum free space LAN: 100 Base-T LAN (1000-base T preferred)
Peripherals	Display: WXGA 1024 × 768 minimum

Options Configuration Guide

Hardware

✓ = Require

Name	Retrofit	Hardware Configuration			
		001	002	010	011
RF Frequency 2.4/5 GHz (Minimum configuration)	—	✓	—	—	—
RF Frequency 2.4/5/6 GHz, 160 MHz Bandwidth	Yes	✓	✓	✓	—
RF Frequency 2.4/5/6 GHz, 320 MHz Bandwidth	Yes	✓	✓	✓	✓

Software

Model	Name	Hardware configurations that can be installed ✓ = Can be installed, No = Cannot be installed			Note
		001 (2.4/5 GHz, 80 MHz Bandwidth)	001, 002, 010 (2.4/5/6 GHz, 160 MHz Bandwidth)	001, 002, 010, 011 (2.4/5/6 GHz, 320 MHz Bandwidth)	
MX886200A	WLAN Measurement Software	✓	✓	✓	Support 802.11b/g/a/n
MX886200A-001	WLAN 802.11ac Option	✓	✓	✓	
MX886200A-002	WLAN 802.11ax Option	✓	✓	✓	
MX886200A-003	WLAN 802.11be Option	✓	✓	✓	
MX886200A-010	2×2MIMO Measurement Software	✓	✓	✓	Support 802.11n/ac
MX886200A-011	2×2MIMO Measurement Software 802.11ax	No	✓	✓	
MX886200A-012	2×2MIMO Measurement Software 802.11be	No	✓	✓	
MX886200A-020	WLAN Security Function	✓	✓	✓	
MX886200A-030	160 MHz Bandwidth	No	✓	✓	
MX886200A-031	320 MHz Bandwidth	No	No	✓	
MX886200A-070	Remote Control Expansion	✓	✓	✓	

Wireless Connectivity Test Set MT8862A Panel Layout

Front Panel

1. **Power switch**
   Turns the power On or Off.
   Off: Power is Off, Green: Power is On.
2. **Standby lamp**
   The power is supplied to the AC inlet and the power switch can be turned On.
3. **Access lamp**
   Green: Accessing the built-in storage device.
4. **IP Address Reset key**
   Long-pressing this switch resets the network settings such as IP address to defaults.
5. **External Ref. lamp**
   Indicates status of external reference signal.
6. **System Error lamp**
   Indicates errors of the unit.
7. **Local key**
   Reset the remote control state by Ethernet to local and enable panel setting.
8. **Remote lamp**
   Off: Local control.
   Green: Remote control.
9. **Preset key**
   Long-pressing this switch resets the parameter settings to defaults.
10. **Ready lamp/Connect lamp/ Measure lamp**
    Ready lamp: Indicates the MT8862A startup state.
    Connect lamp: Indicates the connection state between MT8862A and DUT.
    Measure lamp: Indicates the MT8862A measurement state.
11. **Input Signal Level lamp**
    Indicates the input signal level.
12. **RF Output On/Off lamp**
    Indicates setting state of RF output.
13. **Main In/Out 1, 2 connector/Aux Out connector/ Output lamp/Input lamp**
    Main In/Out 1, 2 connector: Inputs or outputs RF signal.
    Aux Out connector: Outputs RF signal.
    Output lamp: Indicates the connector's setting state.
    Input lamp: Indicates the connector's setting state.

Wireless Connectivity Test Set MT8862A Panel Layout

Rear Panel

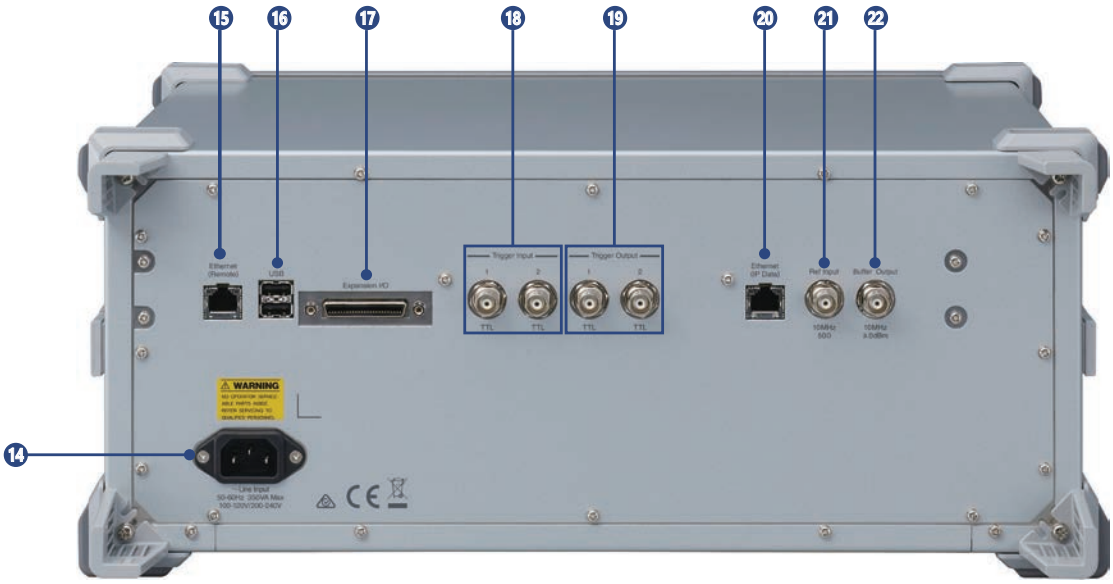

⑭ **AC inlet**
AC power inlet for the power cable.

⑮ **Ethernet (Remote) connector**
Connect a personal computer (PC) or Ethernet network for remote control.

⑯ **USB connector (A type)**
Connector for feature expansion.
Currently not supported.

⑰ **Expansion I/O connector**
Connector for synchronization of MT8862A Primary/Secondary for MIMO Measurement.

⑱ **Trigger Input**
Inputs external trigger signals (TTL).
(BNC connector)

⑲ **Trigger Output**
Outputs trigger signals (TTL).
(BNC connector)

⑳ **Ethernet (IP Data) connector**
Connects a PC or Ethernet network for IP Data input/output.

㉑ **Reference Input connector**
Inputs an external reference frequency signal (10 MHz). (BNC connector)

㉒ **Buffer Output connector**
Outputs the reference frequency signal (10 MHz).
(BNC connector)

Receiver	Frequency Range MT8862A-001 installed: 2.4 GHz to 2.5 GHz, 5.0 GHz to 6.0 GHz MT8862A-002, 010 installed: 6.0 GHz to 7.3 GHz Setting Resolution: 1 Hz Level Setting Range: –65 to +25 dBm Setting Resolution: 0.1 dB Accuracy Measurement Conditions: CW, Measurement Bandwidth: 300 kHz, 20°C to 30°C, Input signal lower than setting level and excluded influence of linearity error, after calibration 2.4 GHz ≤ Frequency ≤ 2.5 GHz ±0.7 dB (–30 dBm ≤ Setting Level ≤ +25 dBm) ±0.9 dB (–55 dBm ≤ Setting Level < –30 dBm) ±1.1 dB (–65 dBm ≤ Setting Level < –55 dBm) 5.0 GHz ≤ Frequency ≤ 6.0 GHz ±0.7 dB (–30 dBm ≤ Setting Level ≤ +25 dBm) ±0.9 dB (–55 dBm ≤ Setting Level < –30 dBm) ±1.1 dB (–65 dBm ≤ Setting Level < –55 dBm) 6.0 GHz < Frequency ≤ 7.3 GHz ±0.7 dB (–30 dBm ≤ Setting Level ≤ +25 dBm) ±0.9 dB (–55 dBm ≤ Setting Level < –30 dBm) ±1.1 dB (–65 dBm ≤ Setting Level < –55 dBm) Measurement Conditions: CW, Measurement Bandwidth: 160 MHz, 20°C to 30°C, Input signal lower than setting level and excluded influence of linearity error, after calibration 2.4 GHz ≤ Frequency ≤ 2.5 GHz ±0.7 dB (–30 dBm ≤ Setting Level ≤ +25 dBm) ±1.0 dB (–50 dBm ≤ Setting Level < –30 dBm) 5.0 GHz ≤ Frequency ≤ 6.0 GHz ±0.7 dB (–30 dBm ≤ Setting Level ≤ +25 dBm) ±1.0 dB (–50 dBm ≤ Setting Level < –30 dBm) 6.0 GHz < Frequency ≤ 7.3 GHz ±0.7 dB (–30 dBm ≤ Setting Level ≤ +25 dBm) ±1.0 dB (–50 dBm ≤ Setting Level < –30 dBm) Measurement Conditions: CW, Measurement Bandwidth: 320 MHz, 20°C to 30°C, Input signal lower than setting level and excluded influence of linearity error, after calibration 5.785 GHz ≤ Frequency ≤ 7.3 GHz ±0.7 dB (–30 dBm ≤ Setting Level ≤ +25 dBm) ±1.0 dB (–50 dBm ≤ Setting Level < –30 dBm) Linearity Measurement Conditions: CW, Measurement Bandwidth: 160 MHz, 0 to –30 dB of setting level ±0.4 dB (–40 dBm ≤ Input Level) Measurement Conditions: CW, Measurement Bandwidth: 320 MHz, 0 to –30 dB of setting level ±0.4 dB (–40 dBm ≤ Input Level)
Transmitter	Frequency Output Frequency Range MT8862A-001 installed: 2.4 GHz to 2.5 GHz, 5.0 GHz to 6.0 GHz MT8862A-002, 010 installed: 6.0 GHz to 7.3 GHz Setting Resolution: 1 Hz Accuracy: Depends on reference oscillator accuracy Level Setting Range: –120 to 0 dBm Setting Resolution: 0.1 dB Accuracy Output Setting: CW 20°C to 30°C, Output Level: ≥–110 dBm, after Calibration ±1.0 dB, ±0.7 dB (typ.) (2.4 GHz ≤ Frequency ≤ 2.5 GHz) ±1.3 dB, ±1.0 dB (typ.) (5.0 GHz ≤ Frequency ≤ 6.0 GHz) ±1.3 dB, ±1.0 dB (typ.) (6.0 GHz < Frequency ≤ 7.3 GHz) Signal Purity Harmonic: ≤–25 dBc
Reference Oscillator	At Start: $\pm 5 \times 10^{-7}$ (2 minutes after power-on, at 25°C referenced to frequency at 1 hour after power-on) $\pm 5 \times 10^{-8}$ (3 minutes after power-on, at 25°C referenced to frequency at 1 hour after power-on) Aging Rate: $\pm 1 \times 10^{-7}$/year Temperature Characteristics: $\pm 2 \times 10^{-8}$ (5°C to 45°C) Shipped Frequency Accuracy: $\pm 2.2 \times 10^{-8}$ (1 hour after power-on at 20°C to 30°C)

Wireless Connectivity Test Set MT8862A Specifications

Front Panel Connectors	RF Input/Output Main1, 2 Connector: N-J, 50Ω (nominal) VSWR: ≤1.5 (2.4 GHz ≤ Frequency ≤ 2.5 GHz) ≤1.7 (5.0 GHz ≤ Frequency ≤ 6.0 GHz) ≤1.7 (6.0 GHz < Frequency ≤ 7.385 GHz) Aux Out Connector: N-J, 50Ω (nominal) VSWR: ≤1.5 (2.4 GHz ≤ Frequency ≤ 2.5 GHz) ≤1.6 (5.0 GHz ≤ Frequency ≤ 6.0 GHz) ≤1.6 (6.0 GHz < Frequency ≤ 7.38 GHz)
Back Panel Connectors	Reference Signal External Reference Input Connector: BNC-J Frequency: 10 MHz, Impedance: 50Ω Operation range: ±1 ppm, Input Level: –15 dBm ≤ Level ≤+20 dBm, 50Ω (AC coupled) Reference Signal Output Connector: BNC-J Frequency: 10 MHz, Impedance: 50Ω Output Level: ≥0 dBm (AC coupled)) External Trigger Trigger Input 1/2 Connector: BNC 1/2, Input Level: TTL Trigger Output 1/2 Connector: BNC 1/2, Output Level: TTL External Interfaces Ethernet (Remote): Required for remote control from external controller Connector: RJ-45, Speed: 1000BASE-T USB: General Purpose, USB 2.0 Connector: USB-A, 2 Ports Expansion I/O: Connector for function expansion Connector: 50 pin (DX10A-50S) Ethernet (IP Data): IP Data Transfer Connector: RJ-45, Speed: 1000BASE-T
Dimensions and Mass	426 (W) × 177 (H) × 390 (D) mm (excluding projections), ≤14 kg
Power Supply	Rated voltage: 100 V(ac) to 120 V(ac) or 200 V(ac) to 240 V(ac) Rated frequency: 50 Hz/60 Hz Power consumption: ≤350 VA
Operating Conditions	Temperature Operating: +5°C to +45°C, Storage: –20°C to +60°C
CE	EMC: 2014/30/EU, EN61326-1, EN61000-3-2 LVD: 2014/35/EU, EN61010-1 RoHS: 2011/65/EU, (EU) 2015/863, EN IEC 63000: 2018
UKCA	EMC: S.I. 2016 No.1091, EN 61326-1, EN61000-3-2 LVD: S.I. 2016 No.1101, EN 61010-1 RoHS: S.I. 2012 No.3032, EN IEC 63000: 2018

WLAN Measurement Software MX886200A Specifications

Frequency Range	2.4 GHz Band: 2412 MHz to 2484 MHz (with MT8862A-001 installed) 5 GHz Band: 5180 MHz to 5825 MHz (with MT8862A-001 installed) 5180 MHz to 5885 MHz (with MT8862A-001, 002, 010 installed) 6 GHz Band:5955 MHz to 7115 MHz (with MT8862A-001, 002, 010 installed)
Amplitude Measurement	Input Level Range: –50 to +25 dBm Input Level Accuracy: After calibration at 20°C to 30°C ±0.7 dB (–30 dBm ≤ Input Level ≤+25 dBm) ±1.0 dB (–50 dBm ≤ Input Level <–30 dBm) Linearity: ±0.4 dB (–40 dBm ≤ Input Level, 0 to –30 dB range compared to setting level) Bandwidth: 40 MHz/20 MHz (802.11n), 20 MHz (802.11a/b/g), 160/80/40/20 MHz (802.11ac, with MX886200A-001 installed), 160/80/40/20 MHz (802.11ax, with MX886200A-002, 030 installed), 320/160/80/40/20 MHz (802.11be, with MX886200A-003, 030, 031 installed)
Spectrum Measurement	Input Level Range: –10 to +25 dBm
EVM (Modulation Accuracy)	EVM Measurement Range: –20 to +25 dBm Residual EVM DSSS: <–28 dB (–20 dBm ≤ Input Level, Average of 20 Packets) OFDM (802.11a/g/n): <–40 dB (–20 dBm ≤ Input Level, Average of 20 Packets, Channel Estimate: Full Packets) OFDM (802.11ac, with MX886200A-001 installed): <–38 dB (–10 dBm ≤ Input Level, Average of 20 Packets, Channel Estimate: Full Packets) OFDM (802.11ac, 160 MHz bandwidth, with MX886200A-001, 030 installed): <–44 dB (nom.) (–10 dBm ≤ Input Level, Average of 20 Packets, Channel Estimate: Full Packets, MCS9) OFDM (802.11ax, with MX886200A-002 installed): <–42 dB (nom.) (–10 dBm ≤ Input Level, Average of 20 Packets, Channel Estimate: Full Packets) OFDM (802.11ax, with MX886200A-002, 030 installed): <–44 dB (nom.) (–10 dBm ≤ Input level, Average of 20 Packets, Channel Estimate: Full packet, MCS11) OFDM (802.11be, 320 MHz bandwidth, with MX886200A-003, 030, 031 installed): <–44 dB (nom.) (–10 dBm ≤ Input level, Average of 20 Packets, Channel Estimate: Full packet, MCS13) EVM Data Format: % or dB Measurement Resolution: 0.01% or 0.01 dB
Carrier Frequency Measurement	Measurement Level Range: –20 to +25 dBm Carrier Frequency Accuracy 802.11b: ± (Setting Frequency × Reference Oscillator Accuracy + 1 kHz) (Average of 20 Packets) 802.11a/g/n/ac: ± (Setting Frequency × Reference Oscillator Accuracy + 1 kHz) (Average of 20 Packets, Channel Estimate: Full Packets) 802.11ax/be: ± (Setting Frequency × Reference Oscillator Accuracy + 5 Hz) (nom.) (more than 100 symbol and 242 tones, and Channel Estimate:Full Packets, Frequency error range: Full packet)
RF Signal Generator	Level Setting Range: –120 to 0 dBm (Aux Out Connector) –120 to 0 dBm (Main 1/2 Connector, Frequency ≤ 6 GHz and Channel Band 2.4 GHz/5 GHz) –120 to –5 dBm (Main 1/2 Connector, Frequency > 6 GHz or Channel Band 6 GHz) EVM: Packet Length 1472 byte 802.11b: ≤–38 dB rms (2412 MHz to 2484 MHz, Long Preamble, Gaussian Filter BT0.5, 5°C to 45°C) 802.11g (OFDM): ≤–40 dB rms(2412 MHz to 2484 MHz, 20°C to 30°C) 802.11a: ≤–38 dB rms (5180 MHz to 5885 MHz, 20°C to 30°C) 802.11n: ≤–40 dB rms (2412 MHz to 2484 MHz, Long GI, HT-mixed format, Channel Bandwidth 40 MHz, 20°C to 30°C) ≤–38 dB rms (5180 MHz to 5885 MHz, Long GI, HT-mixed format, Channel Bandwidth 40 MHz, 20°C to 30°C) 802.11ac: ≤–37 dB rms (5180 MHz to 5885 MHz, Long GI, Channel Bandwidth 80 MHz, 20°C to 30°C) ≤–41 dB rms (5180 MHz to 5885 MHz, Long GI, MCS9, Channel Bandwidth 160 MHz, 20°C to 30°C) 802.11ax: ≤–40 dB rms (nom.) (5180 MHz to 5885 MHz, 0.8 µs GI, Channel Bandwidth 80 MHz, 20°C to 30°C) ≤–41 dB rms (nom.) (5180 MHz to 5885 MHz, 0.8 µs GI, MCS11, Channel Bandwidth 160 MHz, 20°C to 30°C) ≤–41 dB rms (nom.) (5955 MHz to 7115 MHz, 0.8 µs GI, MCS11, Channel Bandwidth 160 MHz, 20°C to 30°C) 802.11be: ≤–40 dB rms (nom.) (5180 MHz to 5885 MHz, 0.8 µs GI, Channel Bandwidth 80 MHz, 20°C to 30°C) ≤–41 dB rms (nom.) (5250 MHz to 5815 MHz, 0.8 µs GI, MCS13, Channel Bandwidth 160 MHz, 20°C to 30°C) ≤–43 dB rms (nom.) (6105 MHz to 6905 MHz, 0.8 µs GI, MCS13, Channel Bandwidth 320 MHz, 20°C to 30°C)
Functions	Network Functions Connection: Network Connection using Messages defined by IEEE802.11 Role: Access Point (AP), Station (Non-AP STA) Frame Capture: 1, 2, 4, 8, 16, 32, 64, 128, 256 MB Tx Test Measurement Type: Data, ACK Rx Test Measurement Type: Packet Error Rate (PER), Frame Reception Rate (FRR) Payload Type: All 0's, 0101, 1010, PN7, PN9, Random, Counting MIMO signal transmission MIMO signals available for receiver testing: 802.11n/ac (with MX886200A-010), 802.11ax (with MX886200A-011), 802.11be (with MX886200A-012) Spatial stream N_{SS}: 1 to 2 (802.11n/ac/ax) 2 (802.11be) Space-time-stream N_{STS}: 2 RF chain N_{TX}: 2 STBC: Supported only with N_{SS}=1 and N_{STS}=2 (802.11n/ac/ax) Spatial mapping: Direct mapping Beamforming: Not supported Security encryption (with MX886200A-020 installed) WEP, WPA-Personal, WPA2-Personal, WPA3-Personal

Typical (typ.): Performance not warranted. Most products meet typical performance.
Nominal (nom.): Values not warranted. Included to facilitate application of product.

Wireless Connectivity Test Set MT8862A Ordering Information

Please specify the model/order number, name and quantity when ordering.
The names listed in the chart below are Order Names. The actual name of the item may differ from the Order Name.

Model/Order No.	Name
	Main Frame
MT8862A	Wireless Connectivity Test Set
	Standard Accessories
J0017F	Power Code: 1
	DVD (Operation Manual): 1
W3901AE	MT8862A Operation Manual (Operation) [DVD]
W3902AE	MT8862A Operation Manual (Remote Control) [DVD]
W3903AE	MX886200A WLAN Measurement Software Manual (Operation) [DVD]
W3904AE	MX886200A WLAN Measurement Software Manual (Remote Control) [DVD]
	RF Options
MT8862A-001	RF Frequency 2.4 GHz, 5 GHz
MT8862A-002	RF Frequency 6 GHz
MT8862A-010	Extended RF Hardware
MT8862A-011	Extended Bandwidth Hardware
	Retrofit RF Options*1
MT8862A-102	RF Frequency 6 GHz Retrofit
MT8862A-202	RF Frequency 6 GHz Retrofit
MT8862A-110	Extended RF Hardware Retrofit
MT8862A-210	Extended RF Hardware Retrofit
MT8862A-310	Extended RF Hardware Retrofit
MT8862A-111	Extended Bandwidth Hardware Retrofit
MT8862A-211	Extended Bandwidth Hardware Retrofit
MT8862A-311	Extended Bandwidth Hardware Retrofit
MT8862A-UG190	Retrofit Service with Service Cert.
MT8862A-UG290	Retrofit Service with Service Cert.
	Software Options
MX886200A	WLAN Measurement Software
MX886200A-001	WLAN 802.11ac Option
MX886200A-002	WLAN 802.11ax Option
MX886200A-003	WLAN 802.11be Option
MX886200A-010	2×2MIMO Measurement Software
MX886200A-011	2×2MIMO Measurement Software 802.11ax
MX886200A-012	2×2MIMO Measurement Software 802.11be
MX886200A-020	WLAN Security Function
MX886200A-030	160 MHz Bandwidth
MX886200A-031	320 MHz Bandwidth
MX886200A-070	Remote Control Expansion
	Options
MT8862A-ES210	2 Years Extended Warranty Service
MT8862A-ES310	3 Years Extended Warranty Service
MT8862A-ES510	5 Years Extended Warranty Service
	Application Parts
J0127A	Coaxial Cord, 1 m (BNC-P, RG-58A/U, BNC-P)
J0127B	Coaxial Cord, 2 m (BNC-P, RG-58A/U, BNC-P)
J0127C	Coaxial Cord, 0.5 m (BNC-P, RG-58A/U, BNC-P)
J0576B	Coaxial Cord, 1 m (N-P, 5D-2W, N-P)
J0576D	Coaxial Cord, 2 m (N-P, 5D-2W, N-P)
J0322A	Coaxial Cord, 0.5 m (SMA-P, SMA-P)
J0322B	Coaxial Cord, 1.0 m (SMA-P, SMA-P)
J0322C	Coaxial Cord, 1.5 m (SMA-P, SMA-P)
J0322D	Coaxial Cord, 2.0 m (SMA-P, SMA-P)
J0004	Coaxial Adapter (N-P, SMA-J)
J1261A	Ethernet Cable (Straight, 1 m)
J1261B	Ethernet Cable (Straight, 3 m)
J1261C	Ethernet Cable (Cross, 1 m)
J1261D	Ethernet Cable (Cross, 3 m)
J1777A	Expansion IO Cable
B0635A	Rack Mount Kit (EIA)
B0657A	Rack Mount Kit (JIS)
B0636C*2	Carrying Case (Hard type, with a front cover and casters)
B0671A	Front Cover (1MW4U)

*1: MT8862A- □ ##
□: Select from the following according to the option type.
1: Retrofit option (Must be returned to factory in Japan)
2: Retrofit option (Must be returned to service center outside of Japan)
3: Retrofit option (No need to return)
*2: The Carrying Case B0636C includes a Front Panel Protective Cover (B0671A).

Anritsu Advancing beyond

Specifications are subject to change without notice.

• **United States**
Anritsu Americas Sales Company
490 Jarvis Drive, Morgan Hill, CA 95037-2809, U.S.A.
Phone: +1-800-Anritsu (1-800-267-4878)

• **Canada**
Anritsu Electronics Ltd.
Americas Sales and Support
490 Jarvis Drive, Morgan Hill, CA 95037-2809, U.S.A.
Phone: +1-800-Anritsu (1-800-267-4878)

• **Brazil**
Anritsu Eletrônica Ltda.
Praça Amadeu Amaral, 27 - 1 Andar
01327-010 - Bela Vista - Sao Paulo - SP, Brazil
Phone: +55-11-3283-2511
Fax: +55-11-3288-6940

• **Mexico**
Anritsu Company, S.A. de C.V.
Blvd Miguel de Cervantes Saavedra #169 Piso 1, Col. Granada
Mexico, Ciudad de Mexico, 11520, MEXICO
Phone: +52-55-4169-7104

• **United Kingdom**
Anritsu EMEA Limited
200 Capability Green, Luton, Bedfordshire, LU1 3LU, U.K.
Phone: +44-1582-433200
Fax: +44-1582-731303

• **France**
Anritsu SA
12 avenue du Québec, Immeuble Goyave,
91140 VILLEBON SUR YVETTE, France
Phone: +33-1-60-92-15-50

• **Germany**
Anritsu GmbH
Nemetschek Haus, Konrad-Zuse-Platz 1,
81829 München, Germany
Phone: +49-89-442308-0
Fax: +49-89-442308-55

• **Italy**
Anritsu S.R.L.
Spaces Eur Arte, Viale dell'Arte 25, 00144 Roma, Italy
Phone: +39-6-509-9711

• **Sweden**
Anritsu AB
Kistagången 20 B, 2 tr, 164 40 Kista, Sweden
Phone: +46-8-534-707-00

• **Finland**
Anritsu AB
Technopolis Aviapolis, Teknobulevardi 3-5 (D208.5.),
FI-01530 Vantaa, Finland
Phone: +358-20-741-8100

• **Denmark**
Anritsu A/S
c/o Regus Winghouse, Ørestads Boulevard 73, 4th floor,
2300 Copenhagen S, Denmark
Phone: +45-7211-2200

• **Spain**
Anritsu EMEA GmbH
Representation Office in Spain
Calle Manzanares 4, Primera planta, 28005 Madrid, Spain
Phone: +34-91-572-6761

• **Austria**
Anritsu EMEA GmbH
Am Belvedere 10, A-1100 Vienna, Austria
Phone: +43-(0)1-717-28-710

• **United Arab Emirates**
Anritsu A/S
Office No. 164, Building 17, Dubai Internet City
P. O. Box – 501901, Dubai, United Arab Emirates
Phone: +971-4-3758479

• **India**
ANRITSU INDIA PRIVATE LIMITED
6th Floor, Indiqube ETA, No.38/4, Adjacent to EMC2,
Doddanekundi, Outer Ring Road, Bengaluru – 560048, India
Phone: +91-80-6728-1300
Fax: +91-80-6728-1301

• **Singapore**
ANRITSU PTE LTD
1 Jalan Kilang Timor, #07-04/06 Pacific Tech Centre
Singapore 159303
Phone: +65-6282-2400
Fax: +65-6282-2533

• **Vietnam**
ANRITSU COMPANY LIMITED
16th Floor, Peakview Tower, 36 Hoang Cau Street, O Cho Dua Ward,
Dong Da District, Hanoi, Vietnam
Phone: +84-24-3201-2730

• **P.R. China (Shanghai)**
Anritsu (China) Co., Ltd.
Room 2301-2303, Tower A, New Caohejing International Business
Center No. 391 Gui Ping Road, Shanghai, 200233, P.R. China
Phone: +86-21-6237-0898
Fax: +86-21-6237-0899

• **P.R. China (Hong Kong)**
ANRITSU COMPANY LIMITED
Unit 1006-7, 10/F., Greenfield Tower, Concordia Plaza,
No. 1 Science Museum Road, Tsim Sha Tsui East,
Kowloon, Hong Kong, P.R. China
Phone: +852-2301-4980
Fax: +852-2301-3545

• **Japan**
Anritsu Corporation
8-5, Tamura-cho, Atsugi-shi, Kanagawa, 243-0016 Japan
Phone: +81-46-296-6509
Fax: +81-46-225-8352

• **Korea**
Anritsu Corporation Limited
8F, A TOWER, 20, Gwacheondaero 7-gil, Gwacheon-si,
Gyeonggi-do, 13840, Republic of Korea
Phone: +82-2-6259-7300
Fax: +82-2-6259-7301

• **Australia**
Anritsu Pty Ltd
Unit 20, 21-35 Ricketts Road, Mount Waverley, Victoria 3149, Australia
Phone: +61-3-9558-8177
Fax: +61-3-9558-8255

• **Taiwan**
ANRITSU COMPANY, INC.
7F, No. 316, Sec. 1, NeiHu Rd., Taipei 114, Taiwan
Phone: +886-2-8751-1816
Fax: +886-2-8751-1817

2409

Printed in Japan 7/OCT/2024 ddcw/CDT Catalog No. MT8862A-E-A-1-(9.00)